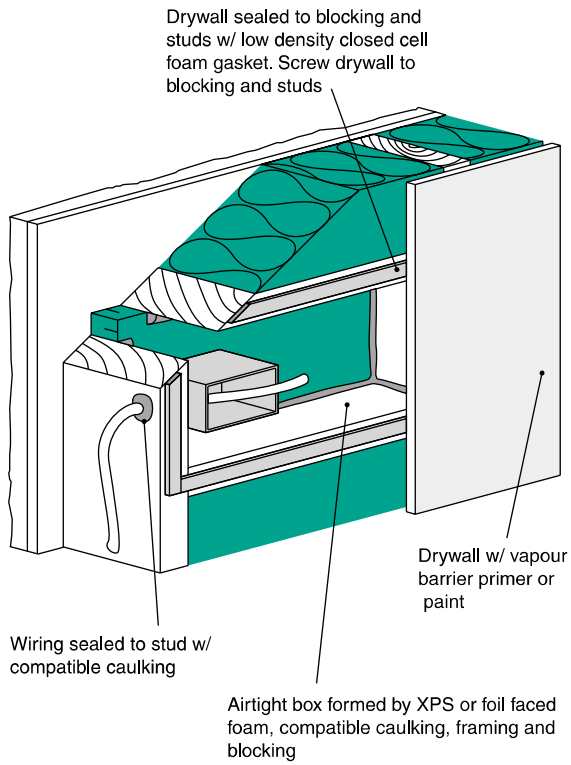

Figure 8.12a Conventional Electrical Box ADA

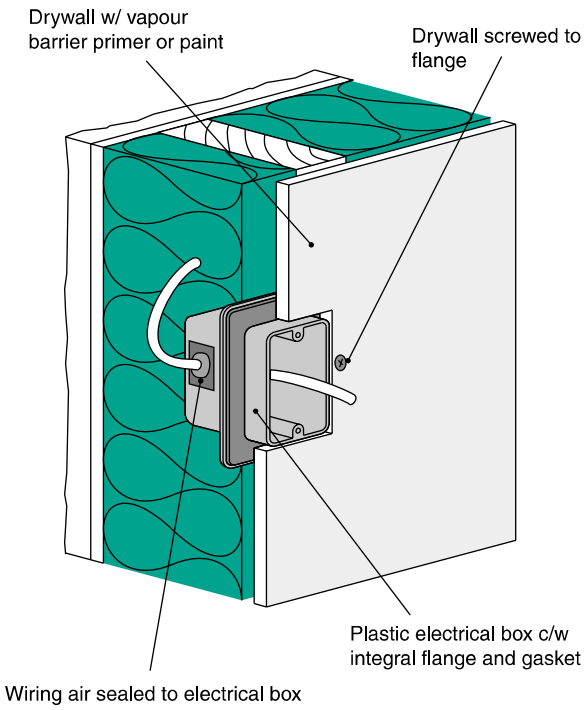

Figure 8.12b Plastic Electric Box ADA

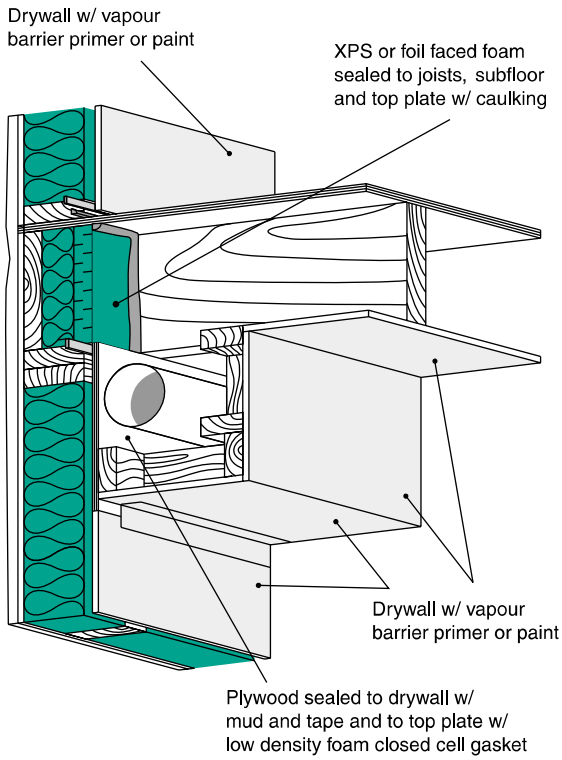

Figure 8.13 Dropped Ceiling ADA

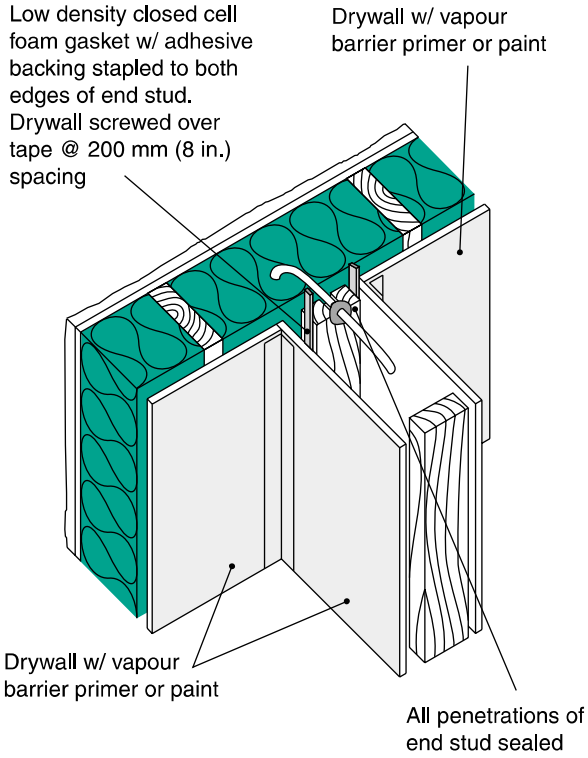

Figure 8.14 Exterior Wall Partition Wall Connection ADA